Be inspired – be energised

Improving the Reliability of Concrete Structures: Current Research & Applications in Industry

Dr Christina McLeod

UNIVERSITY OF KWAZULU-NATAL

CEMENT & CONCRETE SA

Outline of Presentation

- Current research at UKZN in concrete
- Reliability in structural concrete
- Some results from structural reliability and SLS research
- Implications from research for Industry

Research Topics at UKZN in Concrete

- Reliability topics
  - Sustainability in structural reliability analysis
  - Serviceability limit state – target reliability, cracking & deflection
  - Health monitoring
  - Shear models

Research Topics at UKZN in Concrete

- Materials - based ('green' concrete) topics
  - Use of waste materials in concrete
  - Durability
  - Life Cycle Assessment (LCA)
  - Road pavements

Be inspired – be energised

Reliability Assessment of R.C. Structures

- Background & design standards
- SLS Target Reliability
- SLS Cracking

CEMENT & CONCRETE SA

UNIVERSITY OF KWAZULU-NATAL

Be inspired – be energised

Reliability Analysis &- Limit State Design

Structural Engineering is the art of modelling materials we do not wholly understand, into shapes we cannot precisely analyse so as to withstand forces we cannot properly assess, in such a way that the public has no reason to suspect the extent of our ignorance'

$$p_f\,(d) = P[g\,(X) < 0]$$

CEMENT & CONCRETE SA

UNIVERSITY OF KWAZULU-NATAL

Reliability Assessment in Structural Design

Structural reliability reference standards

- JCSS
- SANS 2394: 2004 (update ISO 2394: 2015)
- EN1990
- SANS 10160 -1 (2011)

CEMENT & CONCRETE SA

UNIVERSITY OF KWAZULU-NATAL

Limit state Function for Reliability Model

ULS: SANS 10160-1: $E_d \leq R_d$

LSF: $g(X) = R(X) - E(X)$

(R = Resistance & E = action effects)

CEMENT & CONCRETE SA

UNIVERSITY OF KWAZULU-NATAL

Limit state Function for Reliability Model

SLS: SANS 10160-1: $E_d \leq C_d$

LSF: $g(X) = C(X) - E(X)$

(C = limiting design criterion (fixed value),

e.g. crack width limit)

CEMENT & CONCRETE SA

UNIVERSITY OF KWAZULU-NATAL

Reliability Analysis

- Safety level as measured by reliability index β

$$p_f\,(d) = P[g = R - E < 0] = \Phi\,(-\,\beta_t)$$

- Reliability index linked to particular time period $\Phi\,(\beta_{t,n}) = [\Phi(\beta_{t,1})]^n$
- Consequence class
- Design life of structure

Consequence Class

- Consider loss of human life; economic, social or environmental consequences
- **RC3** High consequence
- **RC2** *Reference class* of medium consequences for most conventional structures.
- **RC1** Low consequences

Be inspired – be energised

Nominal Design Working Life - ULS

1	2	3
Design working life category	Indicative design working life years	Description of structures
1	10	Temporary structures.[a b]
2	25	Replaceable structural parts, for example bearings, agricultural structures and similar structures with low consequences of failure.
3	50	Building structures and other common structures.[c]
4	100	Building structures designated as essential facilities such as having post-disaster functions (hospitals and communication centres, fire and rescue centres), having high consequences of failure[d] or having another reason for an extended design working life.

[a] Structures or parts of structures that can be dismantled with a view to being re-used should not be considered as temporary.

[b] Refer to SANS 10160-8 for the assessment of temporary structures during execution.

[c] The design working life category applies to the reference reliability class referred to in 4.5.2.3.

[d] Consequences of structural failure could be determined in accordance with annex A.

UNIVERSITY OF KWAZULU-NATAL

SA Reliability Index Values

ULS

- β = 3,5 general level
- reference period 50 years, consequence class RC2

SLS

- β = 0 reversible states e.g. small deflections
- β = 1,5 irreversible states e.g. cracking

Parameters as RV's, X_i(PDF, μ, σ)

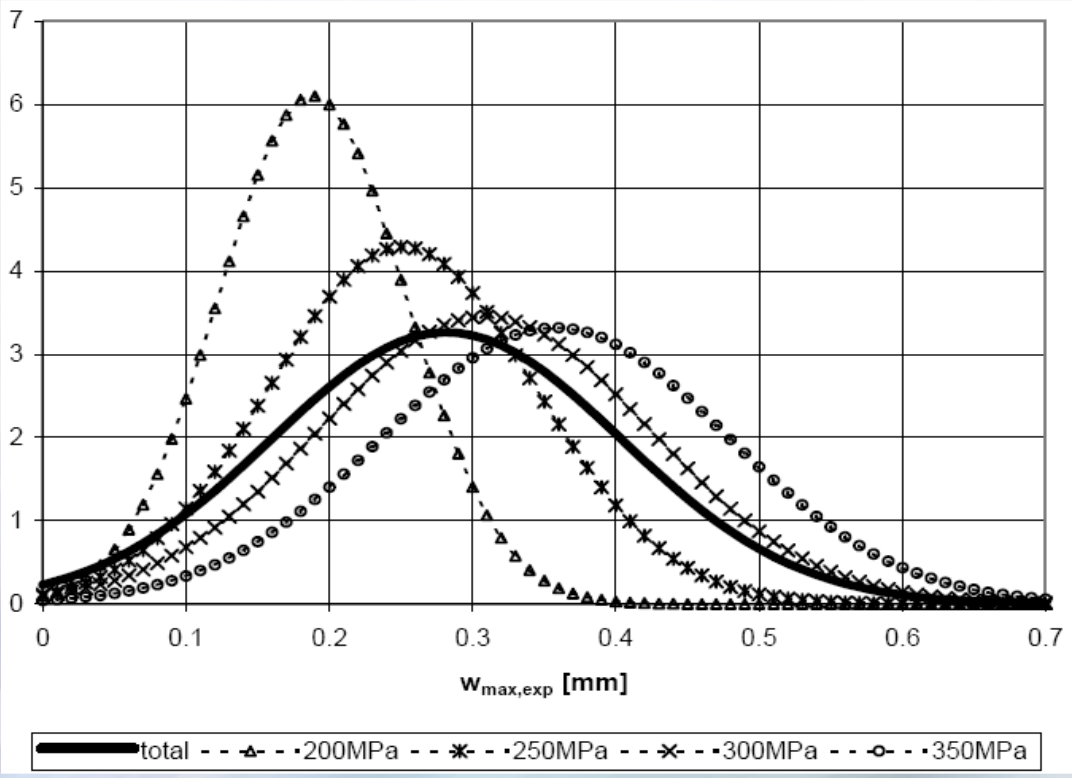

Fig.7.13. *Density curves of the maximum crack width for different stress levels*

Model Uncertainties/ Error

- Variables with known uncertainty (CoV)
- Uncertainty in model
- Level of model uncertainty
- Significant uncertainty – include in LSF as RV (θ)

SLS LSF: $g(X) = C(X) - \boldsymbol{\theta}.E(X)$

Be inspired – be energised

FORM algorithm

$$p_f = \int f_{X_i}(X_i)\, dx_i$$

X_i (PDF, μ, σ)

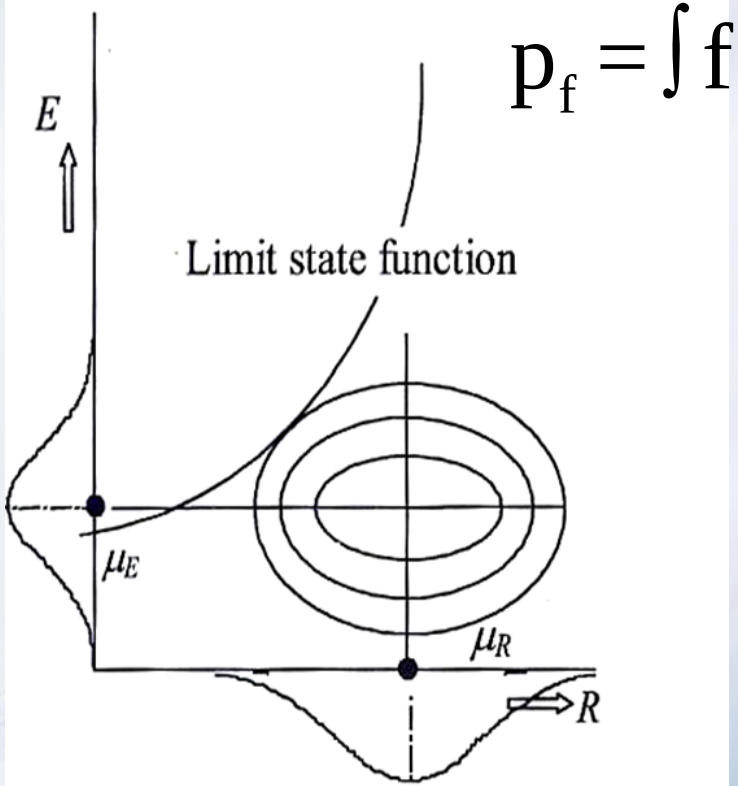

(a) Original basic variables *R* and *E*.

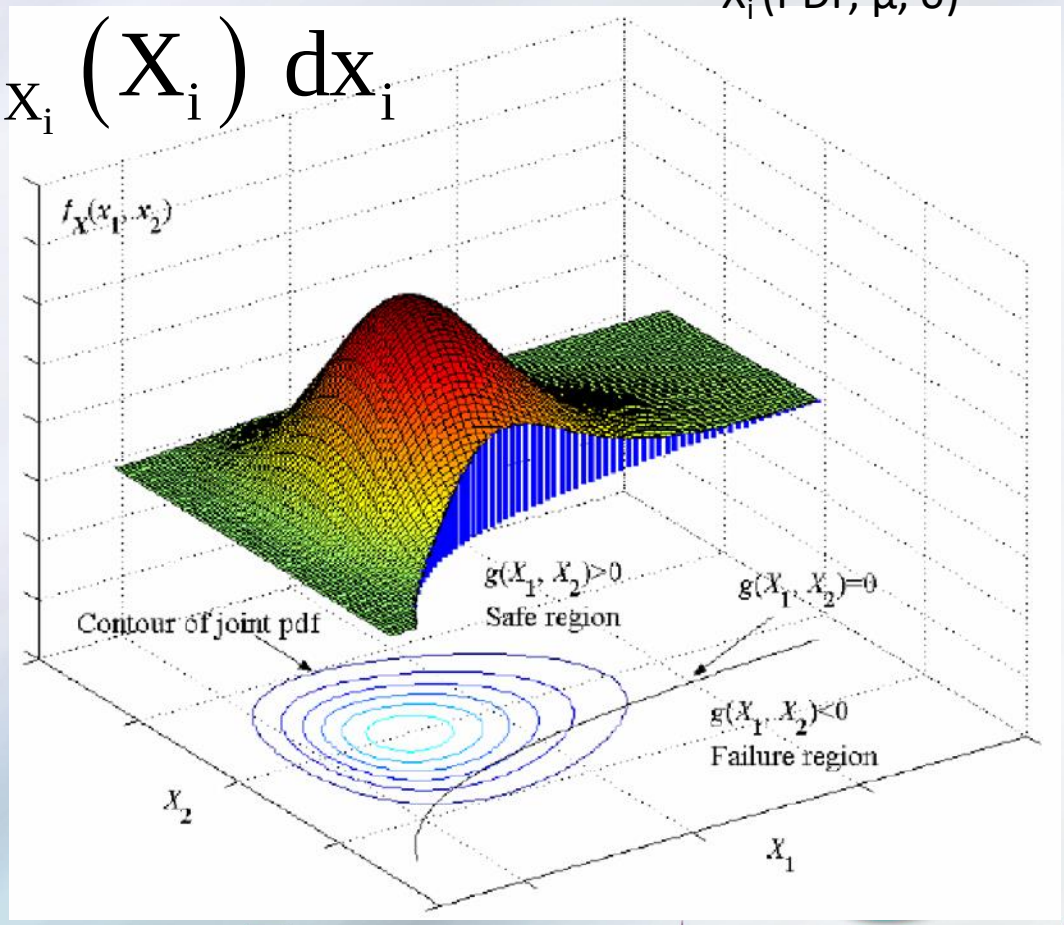

(Source: Holický (2009)

UNIVERSITY OF KWAZULU-NATAL

Be inspired – be energised

FORM algorithm: Transformed Variables

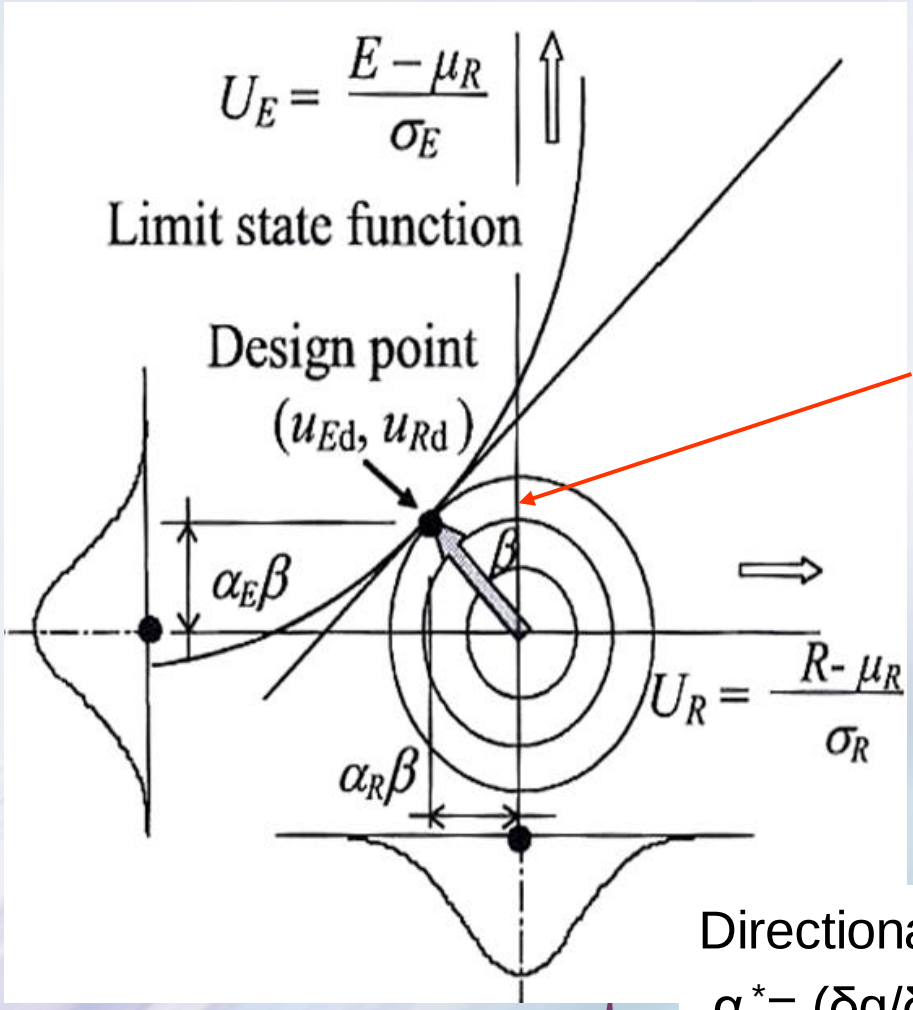

Distance from Origin to Design Point = β

$$\beta = \frac{\sum x_i'^{*} \left(\frac{\delta g}{\delta X_i'}\right)_*}{\sqrt{\sum \left(\frac{\delta g}{\delta X_i'}\right)_*^2}}$$

Directional cosines

$\alpha_i^* = (\delta g/\delta X_i')_* / \sqrt{(\Sigma(\delta g/\delta X_i')_*^2)}$

Transformed RV $X_i^N(\mu_N, \sigma_N)$.

Source: Holický (2009)

Calibration of Reliability Model

- Design value of variable from FORM

$$x^* = \mu_x - \alpha_x \beta \sigma_x$$

- Theoretical psf's

$$\gamma_X = \frac{x^*}{\mu_x}$$

- Calibration & optimisation

→ final design psf's

CEMENT & CONCRETE SA

UNIVERSITY OF KWAZULU-NATAL

Be inspired – be energised

Cost optimisation

For target reliability and design partial safety factors scheme

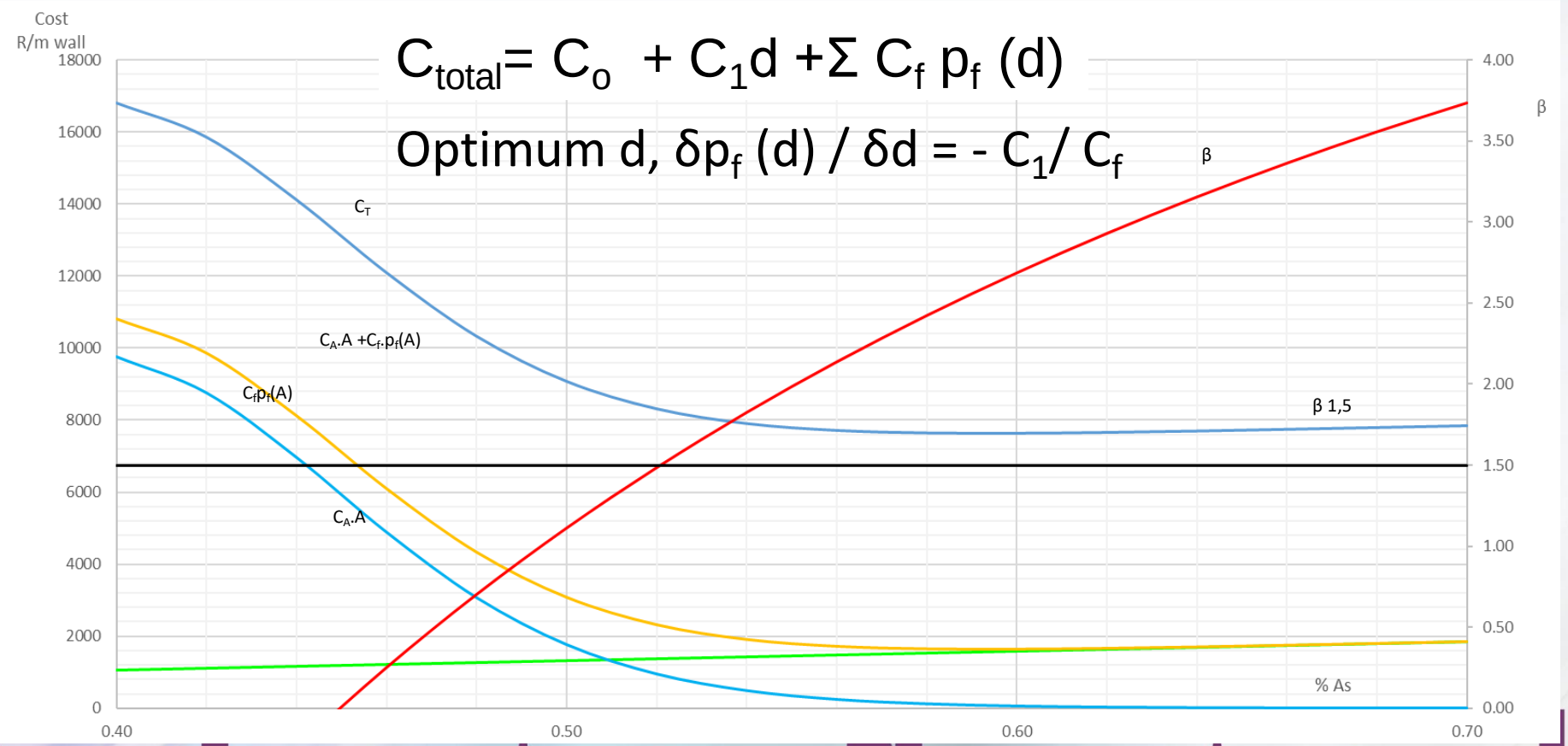

$$C_{total} = C_o + C_1 d + \Sigma C_f p_f(d)$$

Optimum d, $\delta p_f(d) / \delta d = - C_1 / C_f$

Assessment of SLS in Design Standards

- No probabilistic analysis done!
- Research questions:
  - Are the existing standards sufficient?
  - If not, when/why?

CEMENT & CONCRETE SA

UNIVERSITY OF KWAZULU-NATAL

Be inspired – be energised

Reliability of SLS Concrete Crack Models

CEMENT & CONCRETE SA

UNIVERSITY OF KWAZULU-NATAL

Be inspired – be energised

Motivation

EN1992

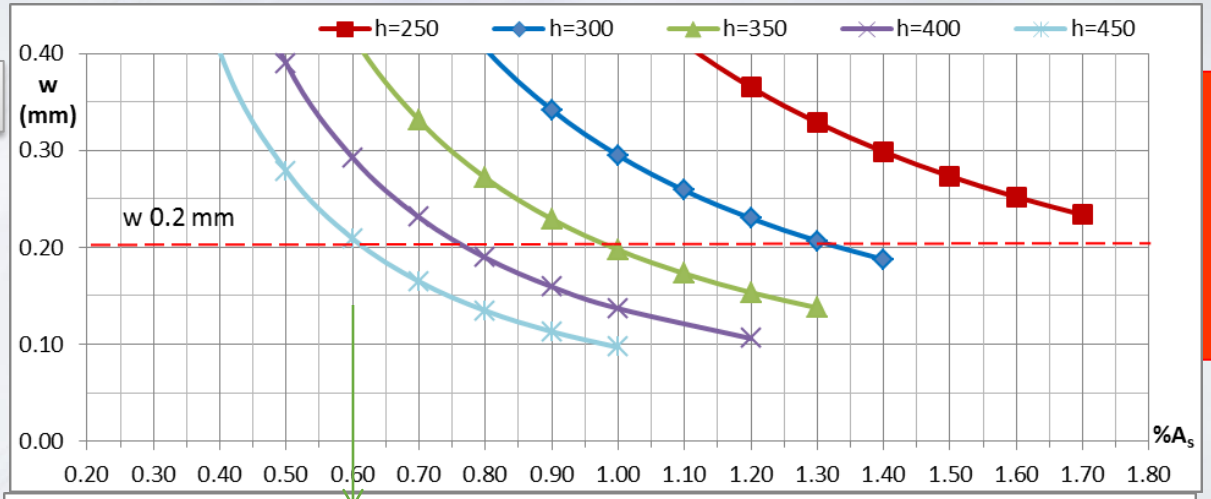

BS8007

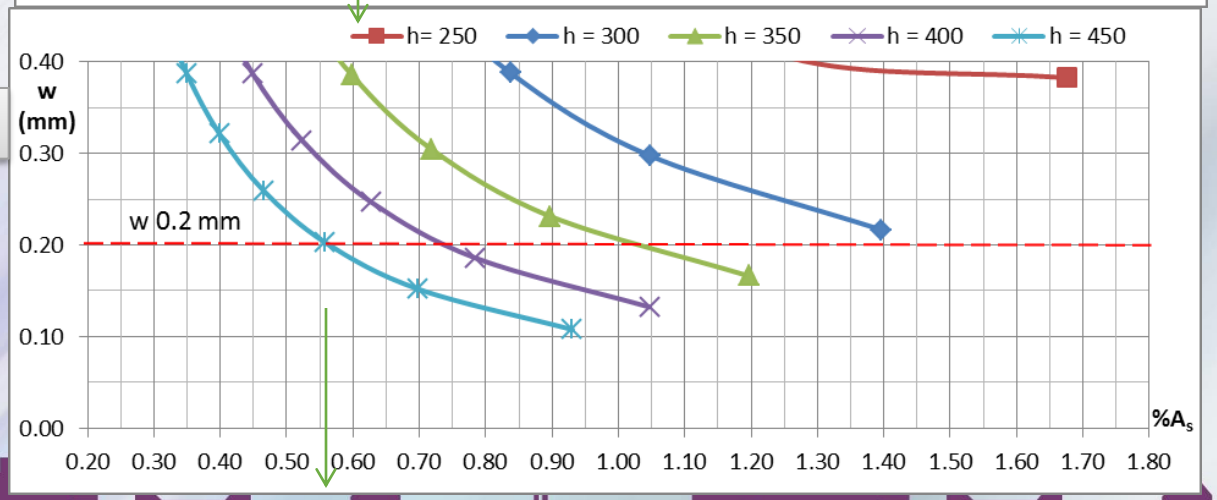

EN1992 more conservative than BS8007

McLeod (2013)

UNIVERSITY OF KWAZULU-NATAL

CEMENT & CONCRETE SA

Reliability Model for Load-induced Cracking

- Assessment of performance of crack models to determine 'best-fit' model
- Limit State Function

$$g = w_{limit} - \theta . W_{predict}$$

- Target Reliability, β_t and design formulations
- Flexure and direct tension crack models
- Short- and Long-term loading

Design Limiting Crack Width, w_{limit}

- General for structures w_k = 0,3 mm
- BS 8007 for WRS (in Annex A of SANS 10100-1)

  w_{max} = 0.2 mm for severe/ very severe exposure

  = 0.1 mm for critical aesthetic appearance

- EN1992-3 for WRS

  Generally, w_{max} = 0.2 mm

  Water tightness class

EN1992-3: Water Tightness

- Class 0 – to EN1992-1
- Class 1 – to EN1992-3, allowing for autogenous healing based on h_D/h ratio
- Class 2 – if cracks go through section, use special measures
- Class 3 – use special measures, e.g. liners

Be inspired – be energised

EN1992-3 & Tightness Class 1

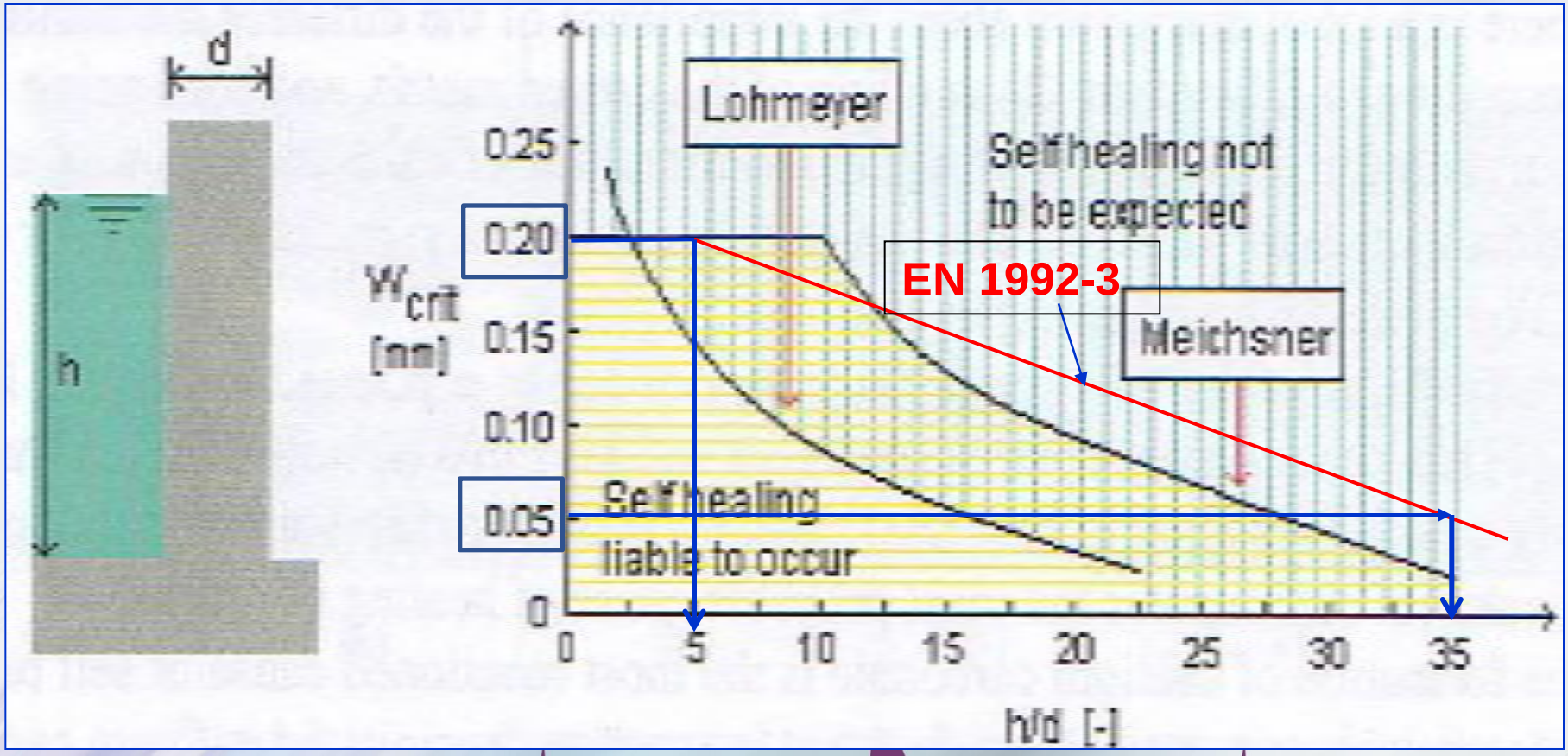

Source: Jones after Walraven

Be inspired – be energised

Crack Width Prediction Models - Analytical

Non-linear bond-slip theory.

Compatibility relationship

$$w = \int_0^{Sr} [\varepsilon_s(x) - \varepsilon_c(x) dx$$

Bond-slip relationship and associated stresses. (After Lapi et al, 2017)

STRESSES IN SECTION

SLIP

BOND STRESS

STEEL STRESS

CONCRETE STRESS

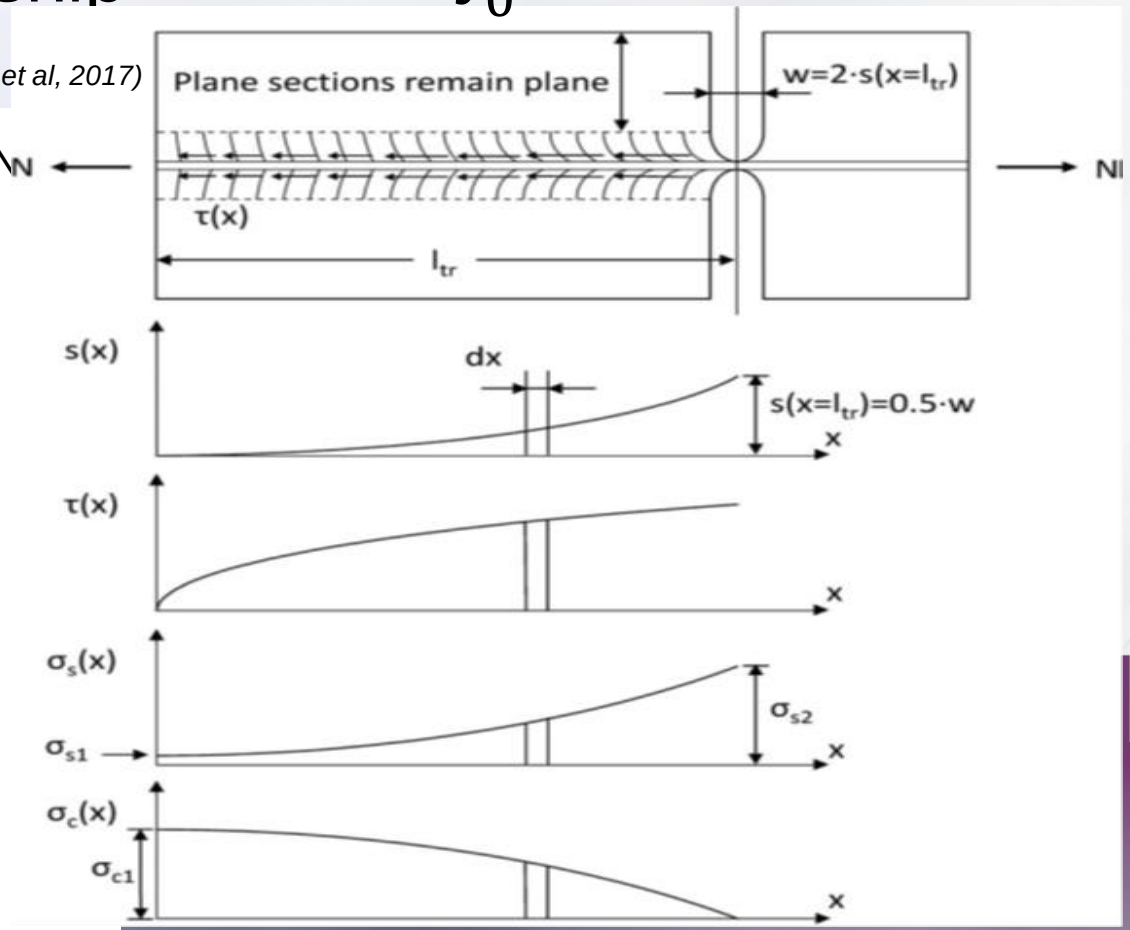

Be inspired – be energised

Crack Width Prediction Models: Semi-analytical

- *fib* MC 2010

$$w_k = 2\, l_{s,max} \cdot \varepsilon_m \leq w_{limit}$$

- Eurocode

EN 1992-1 & EN 1992-3

$$w_k = S_{r,max} \cdot \varepsilon_m \leq w_{limit}$$

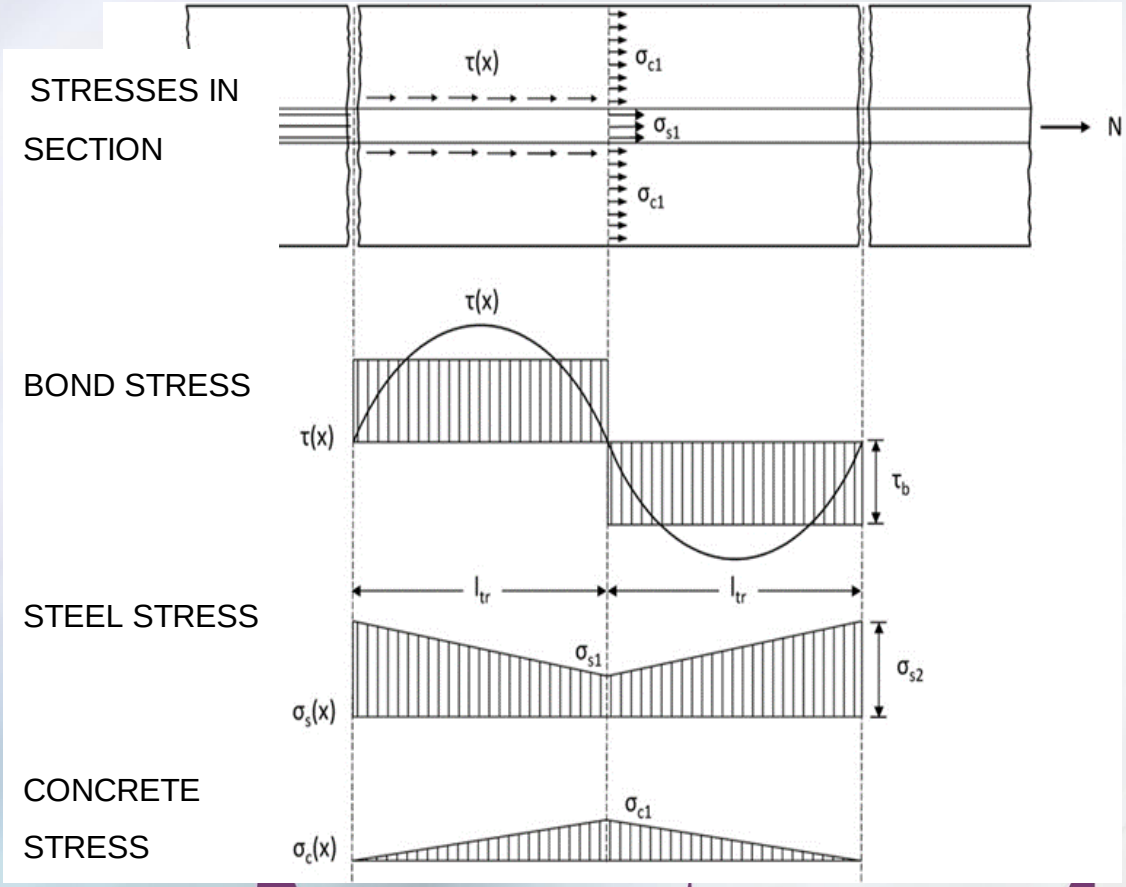

Actual & assumed stress distributions of bond-slip model (Source: Lapi et al, 2017)

Crack Width Prediction Models - Empirical

- SANS 10100-1/ BS 8007

Flexure

$$w = \frac{3a_{cr}\varepsilon_m}{1+2\left(\frac{a_{cr}-c_{\min}}{h-x}\right)}$$

Tension

$$w = 3a_{cr}\varepsilon_m$$

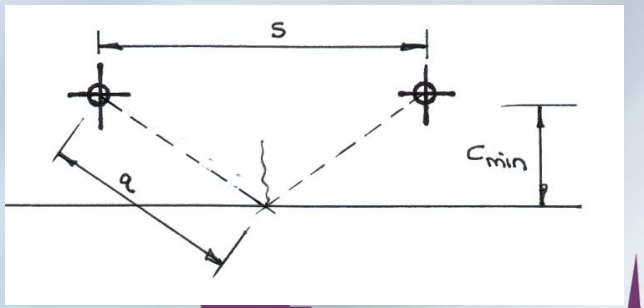

Crack model parameters as RV's

- Typical SA water retaining structures

Variable	Symbol	Units	PDF	Characteristic Value	Mean μ_x	Std Dev. σ_x
Rectangular LRS: Height of wall	H	m	Det	5 & 7	5 & 7	-
Circular LRS: Reservoir diameter	D	m	Det	20 & 25	20 & 25	-
Concrete c/s thickness: Flexure Tension	h	mm	N	500 & 600 250	500 & 600 250	5.0 & 6.60 2.50
Concrete c/s width	b	mm	Det	1000	1.0	-
Water pressure, L_k: H 5 m H 7m	L_k	kN/m^2	N	50 70	49.05 68.67	2.45 3.43

Model Uncertainty, θ

- Verified as significant in concrete crack prediction models
- Thus, included as RV
- Specific to given crack model
- Defined as model factor $w_{exp}/w_{predict}$

CEMENT & CONCRETE SA

UNIVERSITY OF KWAZULU-NATAL

Results of Reliability Analyses

- Quantification of model uncertainty as RV (θ)

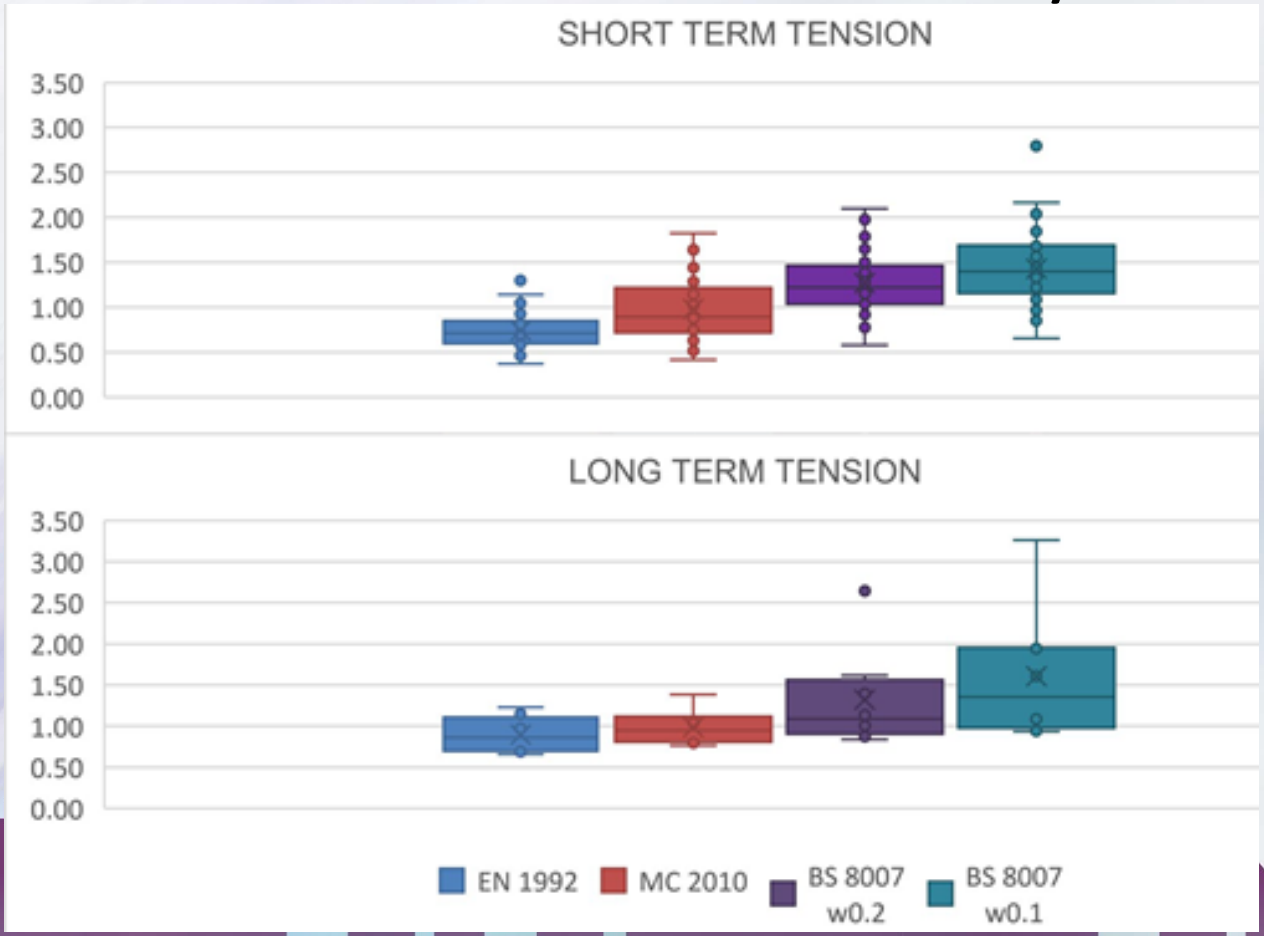

Results of Reliability Analyses

- Quantification of model uncertainty as RV, θ
- Flexural cracking

Load Case	Statistical parameter	EN 1992	MC 2010	BS 8007 w = 0.2 mm	BS 8007 w = 0.1 mm
Short term	Mean	1.107	1.052	1.185	1.112
	CoV	0.397	0.376	0.380	0.459
	PDF	LN	LN	LN	LN
	Count	164	164	164	164
Long term	Mean	1.443	1.127	1.502	1.514
	CoV	0.331	0.380	0.336	0.357
	PDF	LN	LN	LN-N	LN-N
	Count	30	30	30	30

Results of Reliability Analyses

- Quantification of model uncertainty as RV, θ
- Tension cracking

Statistical Parameter	EN 1992	MC 2010	BS 8007 w 0,2 mm	BS 8007 w 0,1 mm
Mean	0.895	0.988	1.318	1.603
Median	0.860	0.946	1.089	1.353
Standard Deviation	0.220	0.214	0.597	0.793
COV	0.246	0.216	0.453	0.495
Sample Variance	0.048	0.046	0.356	0.629
Minimum	0.656	0.764	0.836	0.935
Maximum	1.227	1.382	2.643	3.262
PDF (estimated)	LN	LN	N	N
Count	8	8	8	8

Reliability of 'Best-fit' crack model

- MC 2010 applied to WRS
- β range 2,4 -3,2 (compare to β 1,5)

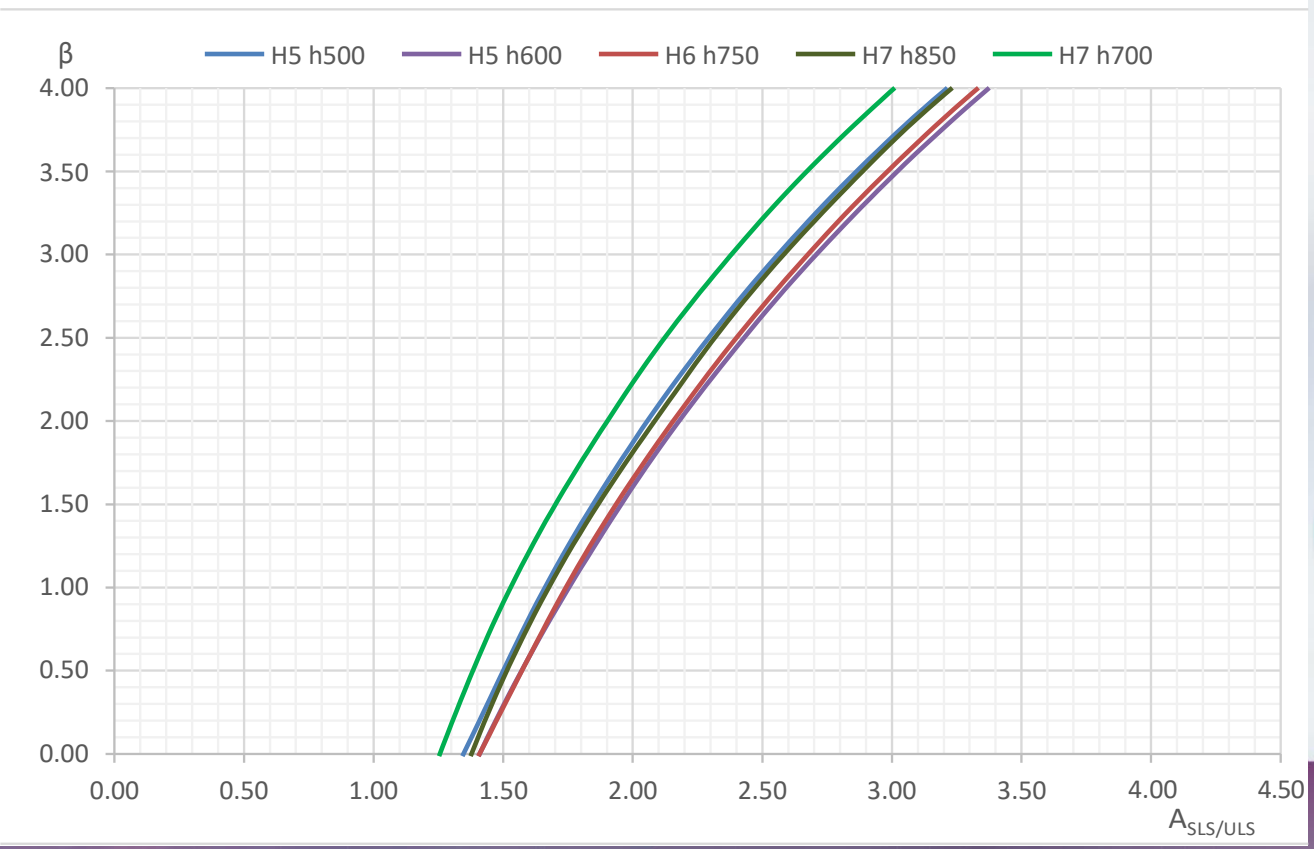

Be inspired – be energised

Theoretical Partial Safety Factors

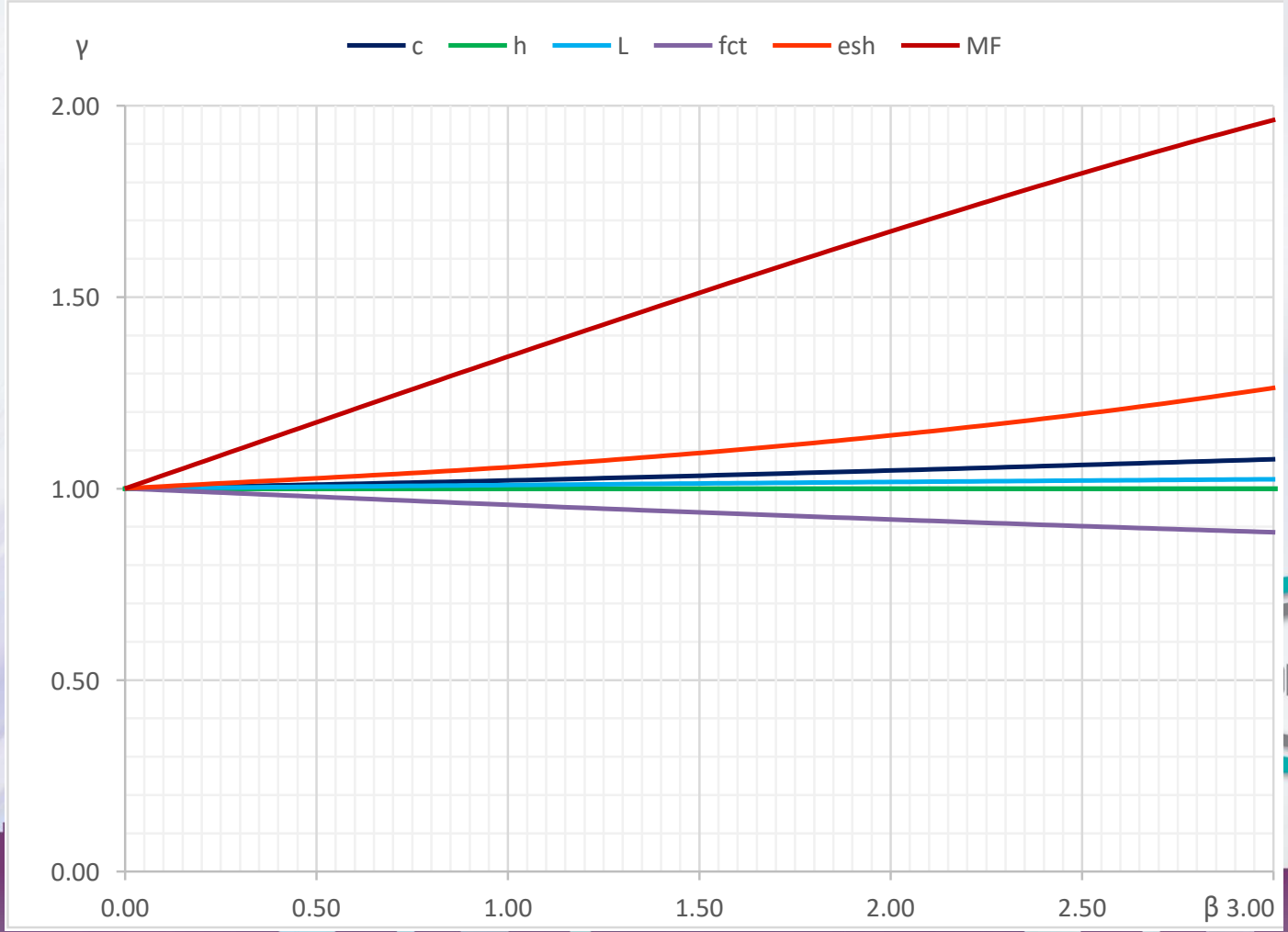

CEMENT & CONCRETE SA
UNIVERSITY OF KWAZULU-NATAL

SLS Target Reliability

- Way & McLeod (2023)
- Cost optimisation
- ULS

	C_F/C_0		
C_1/C_0	Min.	Mod.	Great
Low	3.1	3.3	3.7
Medium	3.7	4.2	4.4
High	4.2	4.4	4.7

- SLS???

Annual ULS Target reliability (βt) for failure costs (CF/C0) and costs of safety (C1/C0) from the JCSS PMC and ISO 2394:2015.

SLS Target Reliability Cost Optimisation

- Bridges – low failure cost category, β_t 2,2 (1 year)

- WRS – low to high failure cost categories depending on leakage, β_t up to 3,6 (1 year)

Initial Conclusions for SLS β_t

- Single SLS target reliability insufficient
- Current SLS target reliability too low in some instances.

CEMENT & CONCRETE SA

UNIVERSITY OF KWAZULU-NATAL

Research Applications & Industry

Structural design standards for Concrete:

- SANS 51992-1-1/EN 1992-1-1:2004
- SANS 10100-3
- *fib* Model Code 2010 and 2020

Research Applications & Industry

- Bridges

CEMENT & CONCRETE SA

UNIVERSITY OF KWAZULU-NATAL

Be inspired – be energised

Research Applications & Industry

- Water retaining structures

CEMENT & CONCRETE SA

UNIVERSITY OF KWAZULU-NATAL

Research Applications & Industry

- Application examples – Concrete Industrial floors

Be inspired – be energised

Thank you

CEMENT & CONCRETE SA

UNIVERSITY OF KWAZULU-NATAL